COLORLITES
CLEAR & COLOURED GLASS

TECHNICAL DRAWING

PRODUCT	**700ml Pacho Glass Bottle**
PRODUCT CODE	**GLA-FOO-000049**

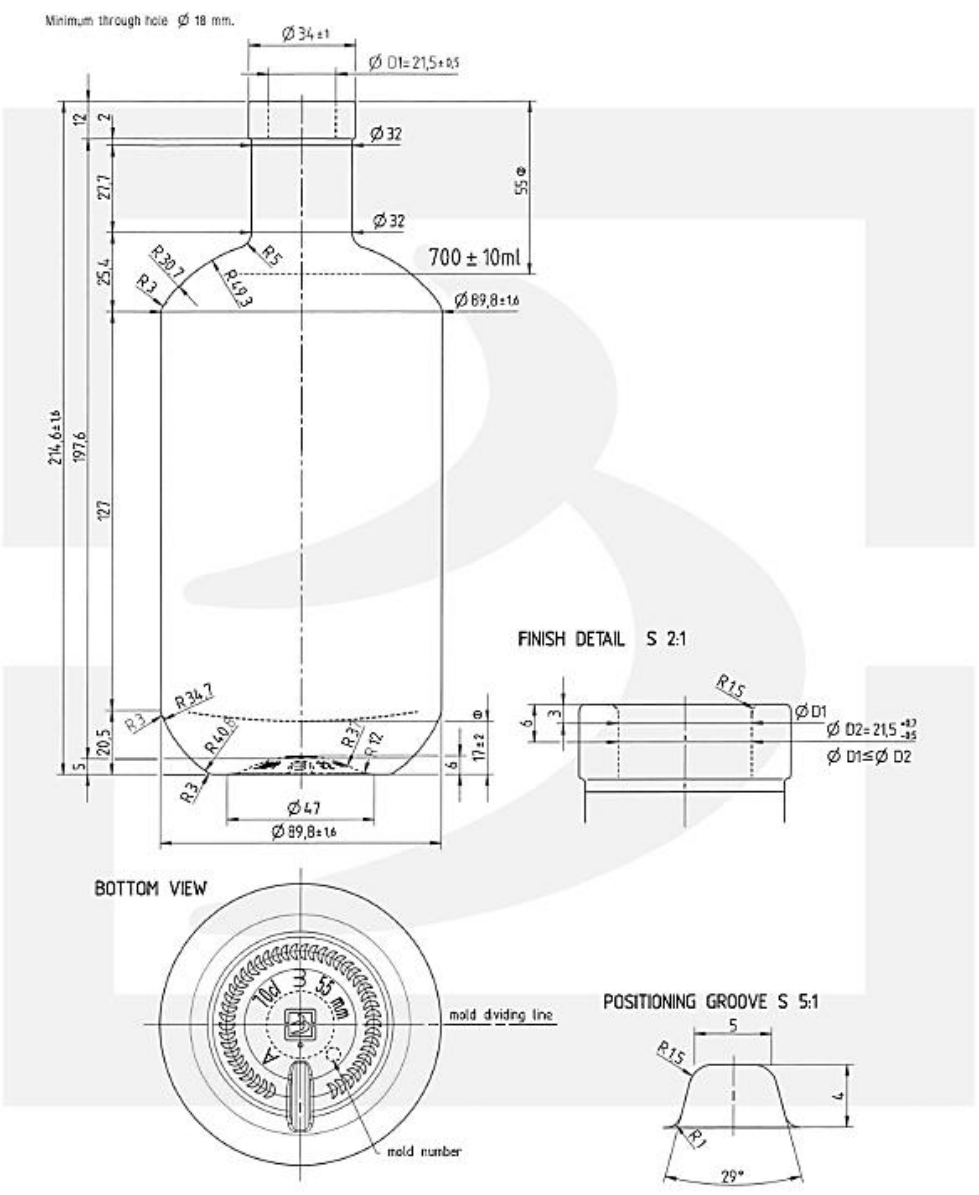

PRODUCT SPECIFICATION DETAILS:

Date of Drawing	
Scale	Not to scale
Glass weight (g) (Approx)	
Finish	
Additional Information	
Material composition	
Material recyclable?	